REXAM Glass Dongen	Container nr. : 30001533	Description : Bottle STD16_750_F1_43TO	Reference nr. 7218

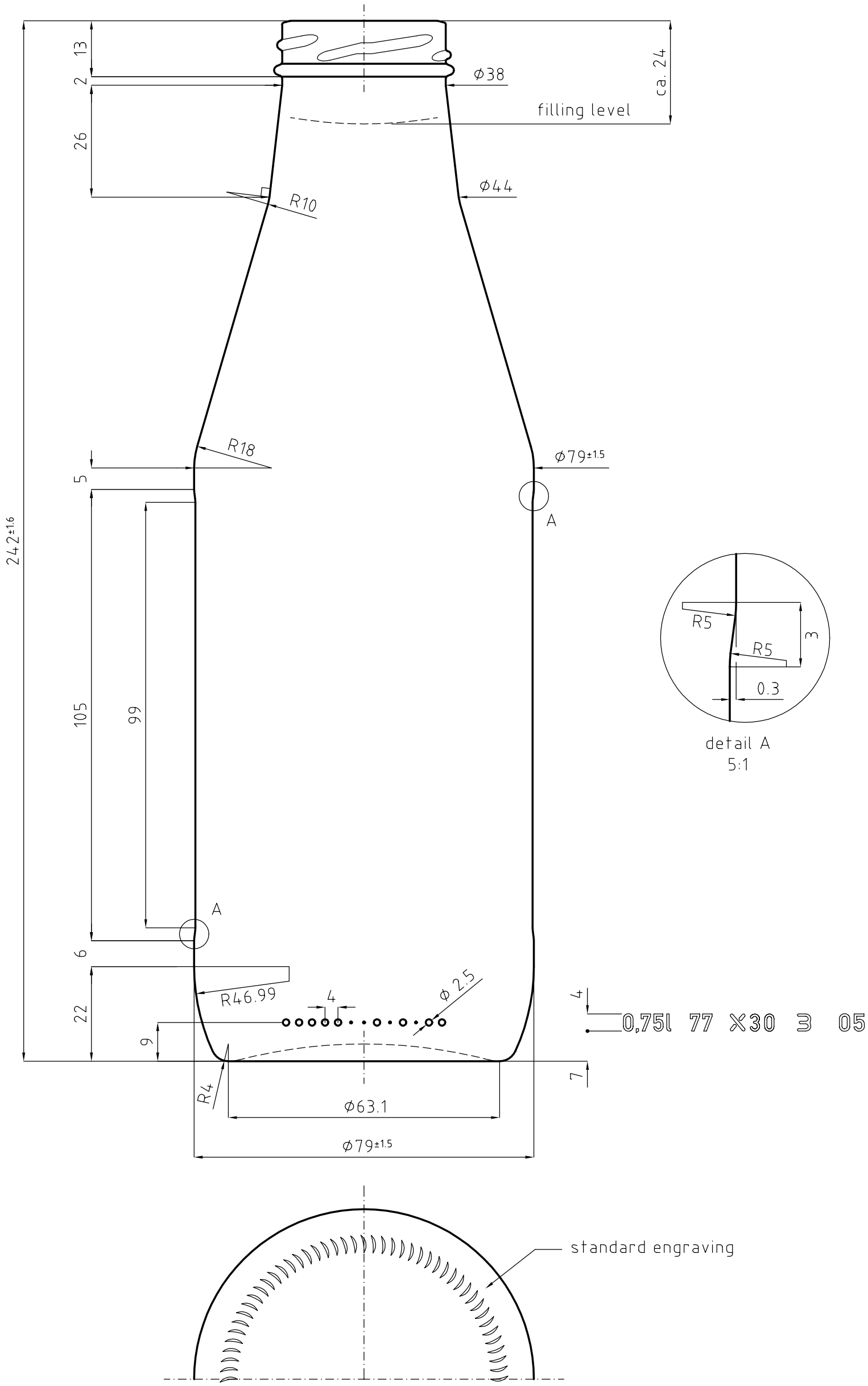

Brimful cap. average : 772 ±3.5 ml.	Gravitycentre (empty) : ca. 99.8 mm.	Colour : flint		Date	Revisions
Brimful cap. individual : 772 ±10 ml.	Critical speed (empty) : ca. 0.31 m/s	Project : 2004-99a			
Fillpoint capacity : ca. 750 ml.	Theor. tip angle : 18.2°	Designer : M.P.	77-0060		
Design glass weight : ca. 325 gr.	Theor. wall thickness : 2.33 mm.	Date : 07-10-'04	Drawing number		
Finish : 43 mm. twist-off (GME 20.03)	☑ Non-refillable ☐ Refillable	Scale : 1:1 (on A3)			

Copyright REXAM Glass Dongen BV TREAT CONFIDENTIALLY